AQFORM
LIGHTING SOLUTIONS

INSTALLATION INSTRUCTION

MULTRITRACK high recessed system

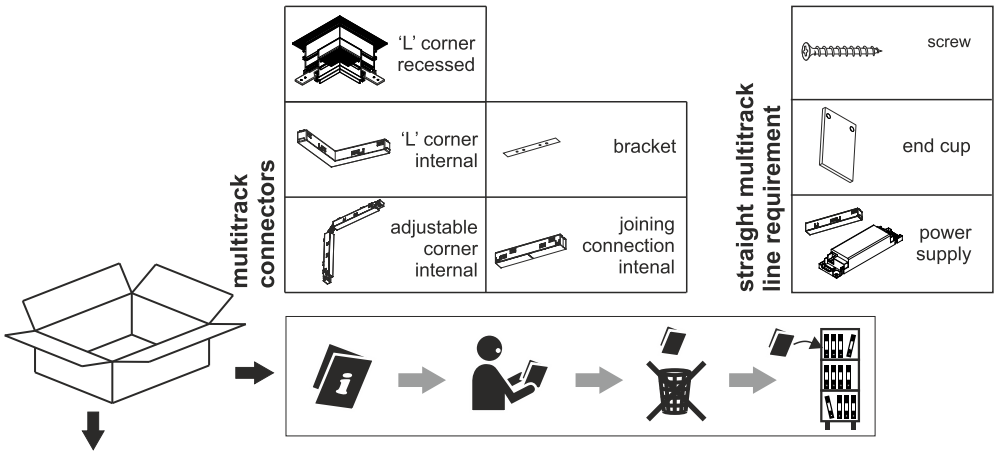

power supply dimmensions

DRIVER	60W	100W	200W
L [mm]	163	300	390
M [mm]	43	30	30
H [mm]	32	17	23

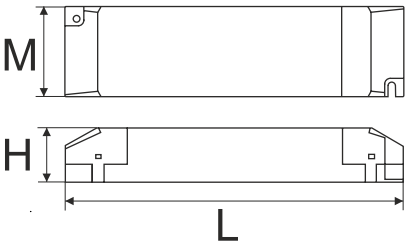

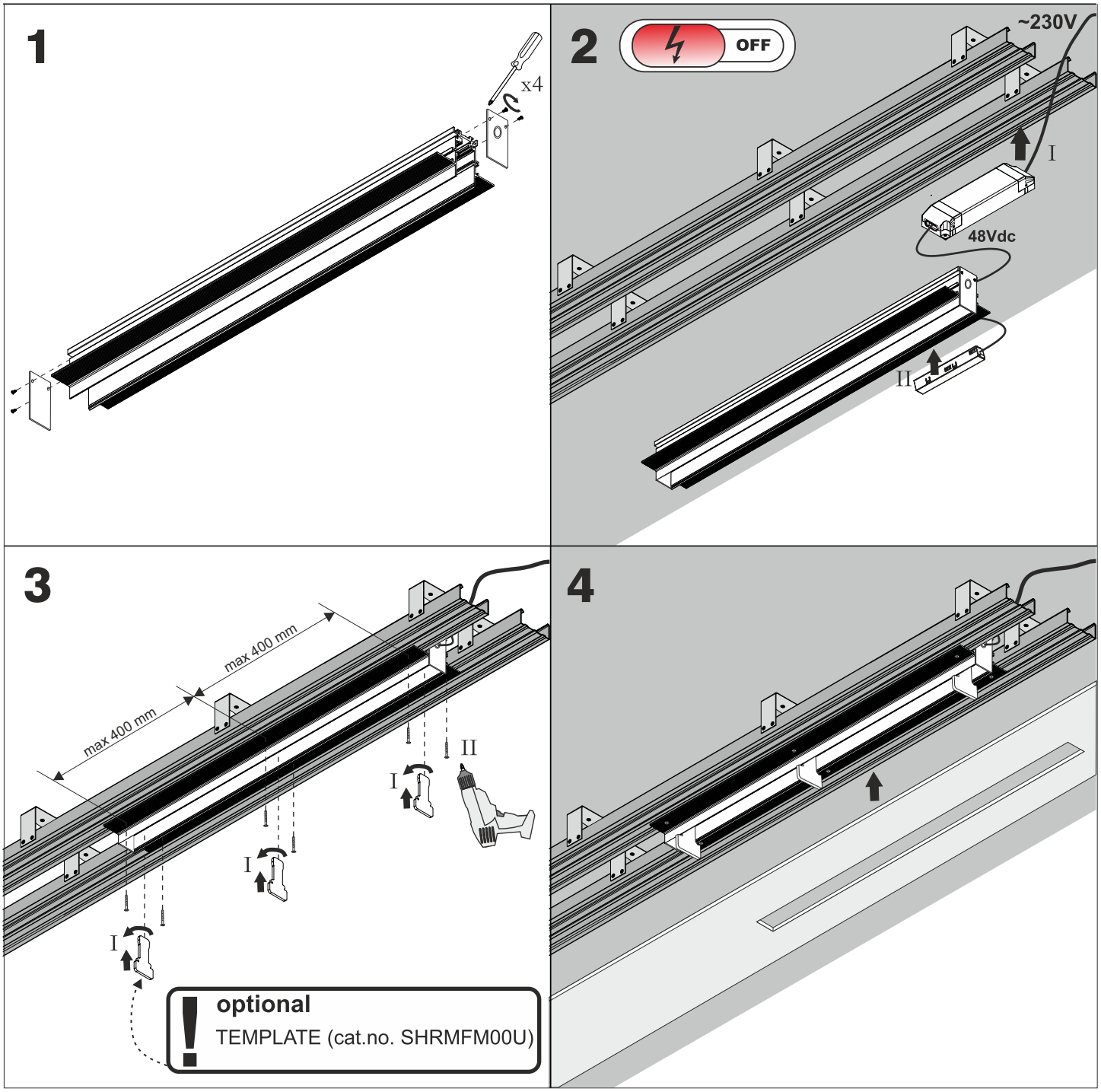

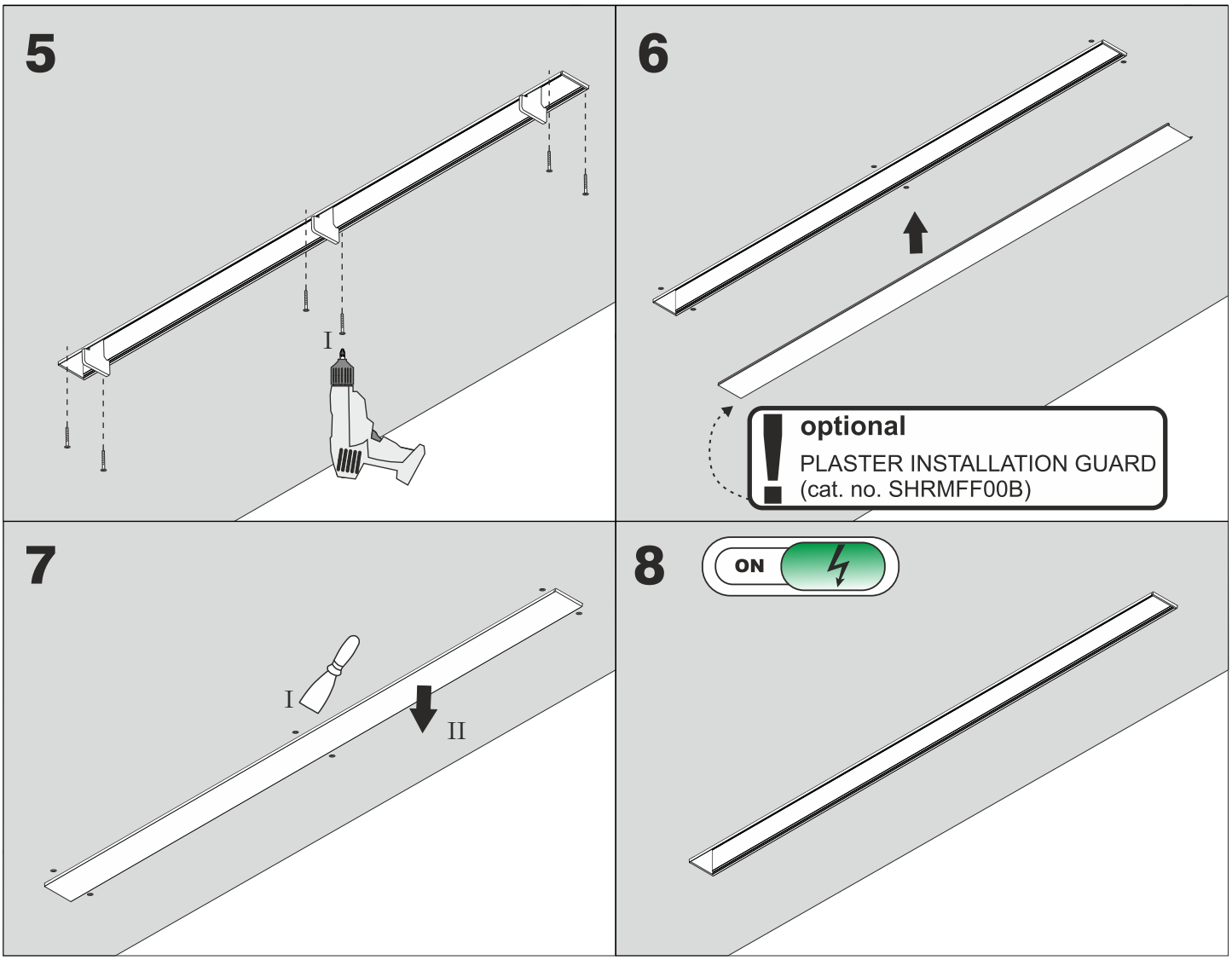

„L" - connection

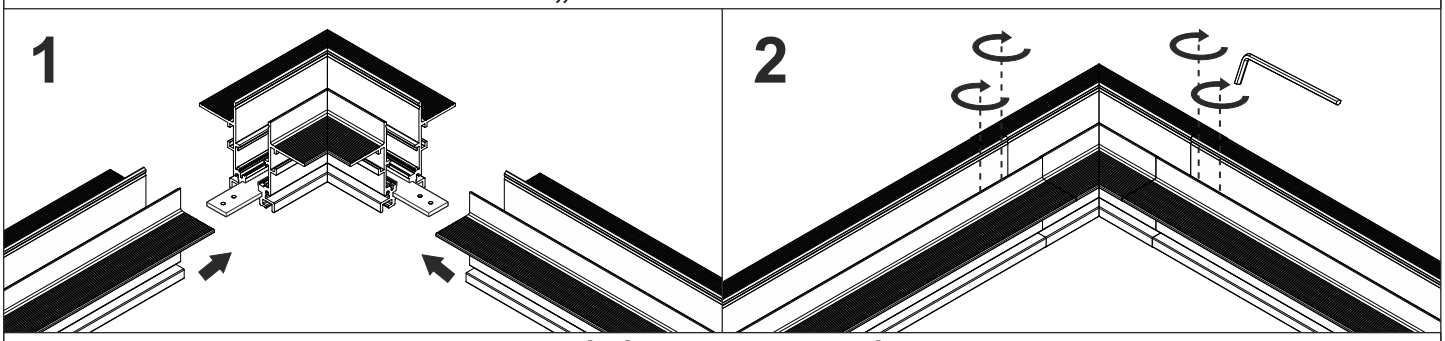

straight - connection

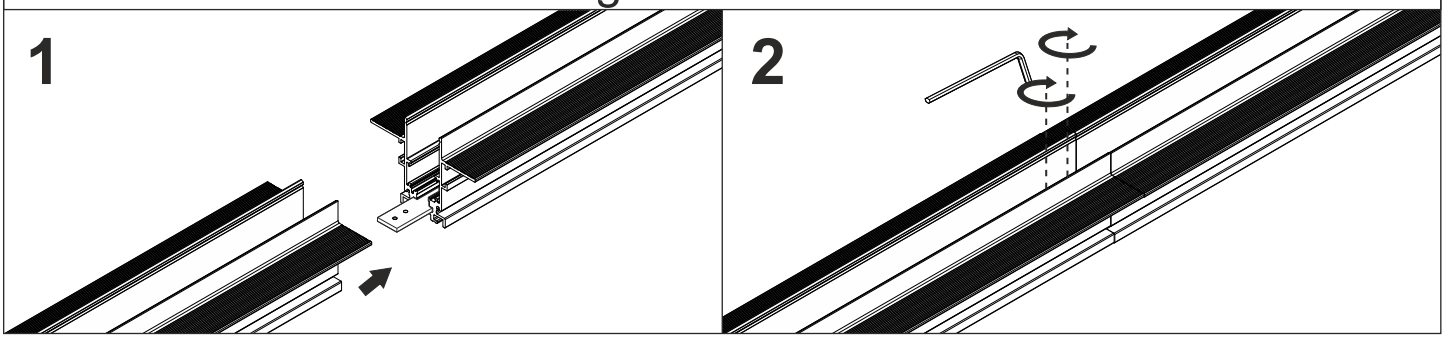
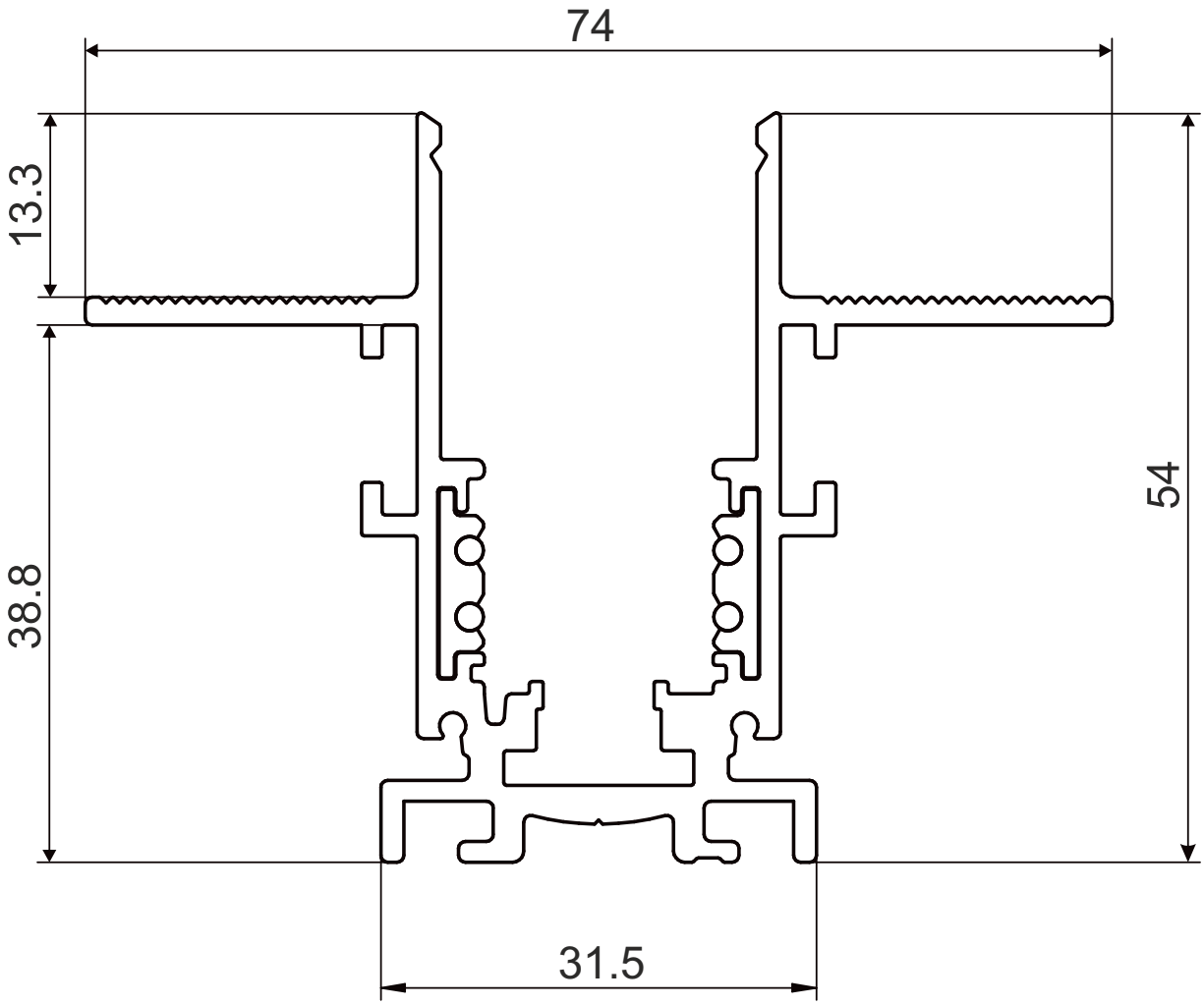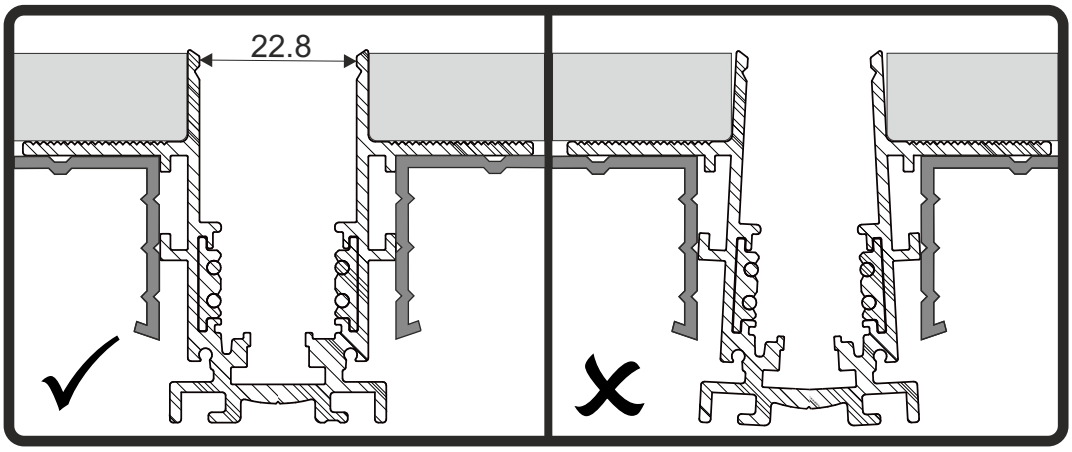
MULTRITRACK high recessed - dimensions